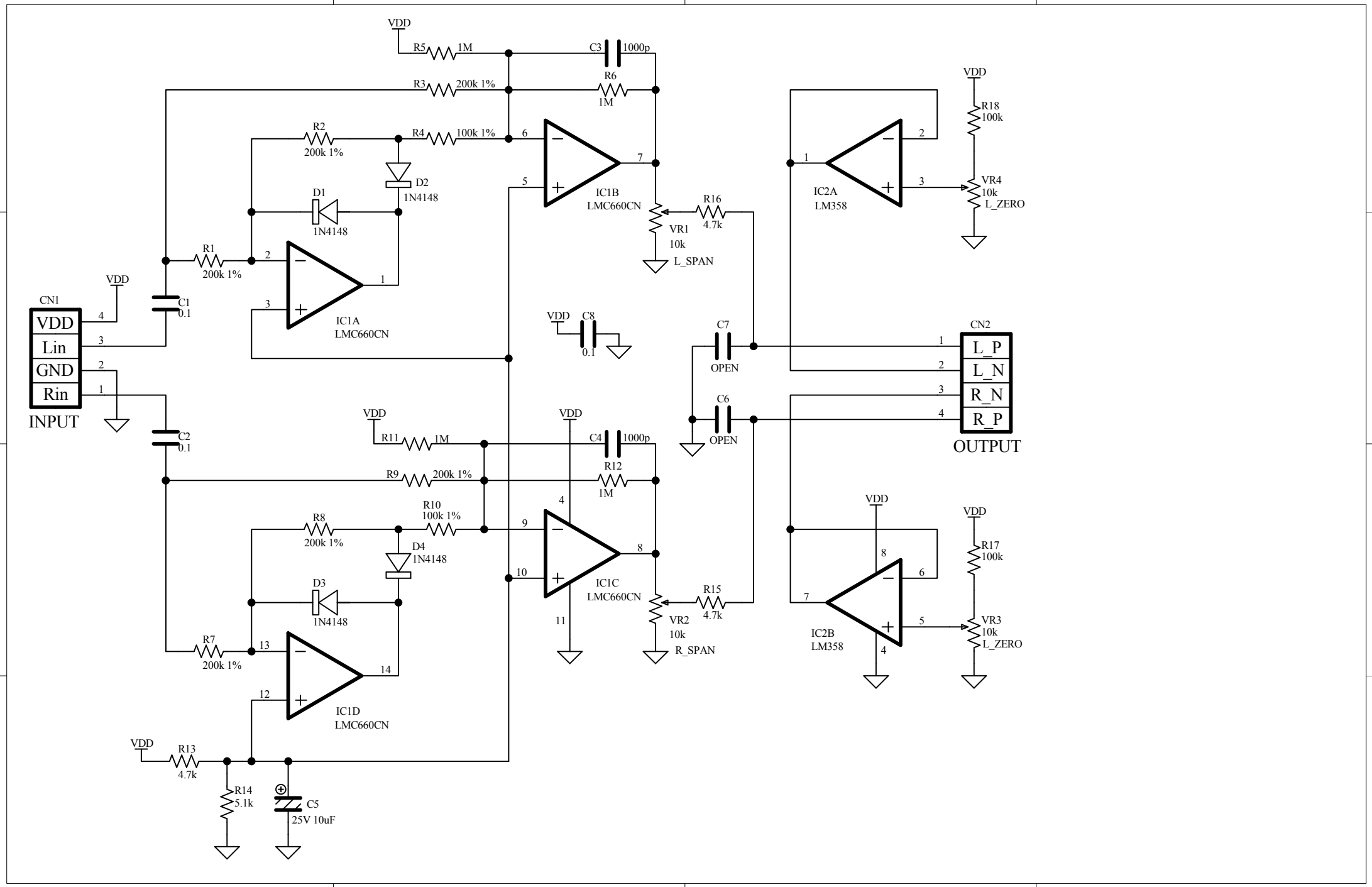
VDD
R5
1M
C3
1000p
R6
1M
R3
200k 1%
R2
200k 1%
R4
100k 1%
D2
1N4148
D1
1N4148
R1
200k 1%
IC1A
LMC660CN
IC1B
LMC660CN
R16
4.7k
VR1
10k
L_SPAN
IC2A
LM358
R18
100k
VR4
10k
L_ZERO
CN1
VDD
Lin
GND
Rin
INPUT
C1
0.1
C2
0.1
C8
0.1
C7
OPEN
C6
OPEN
CN2
L_P
L_N
R_N
R_P
OUTPUT
R11
1M
C4
1000p
R12
1M
R9
200k 1%
R10
100k 1%
R8
200k 1%
D4
1N4148
D3
1N4148
R7
200k 1%
IC1C
LMC660CN
R15
4.7k
VR2
10k
R_SPAN
IC2B
LM358
R17
100k
VR3
10k
L_ZERO
IC1D
LMC660CN
R13
4.7k
R14
5.1k
C5
25V 10uF