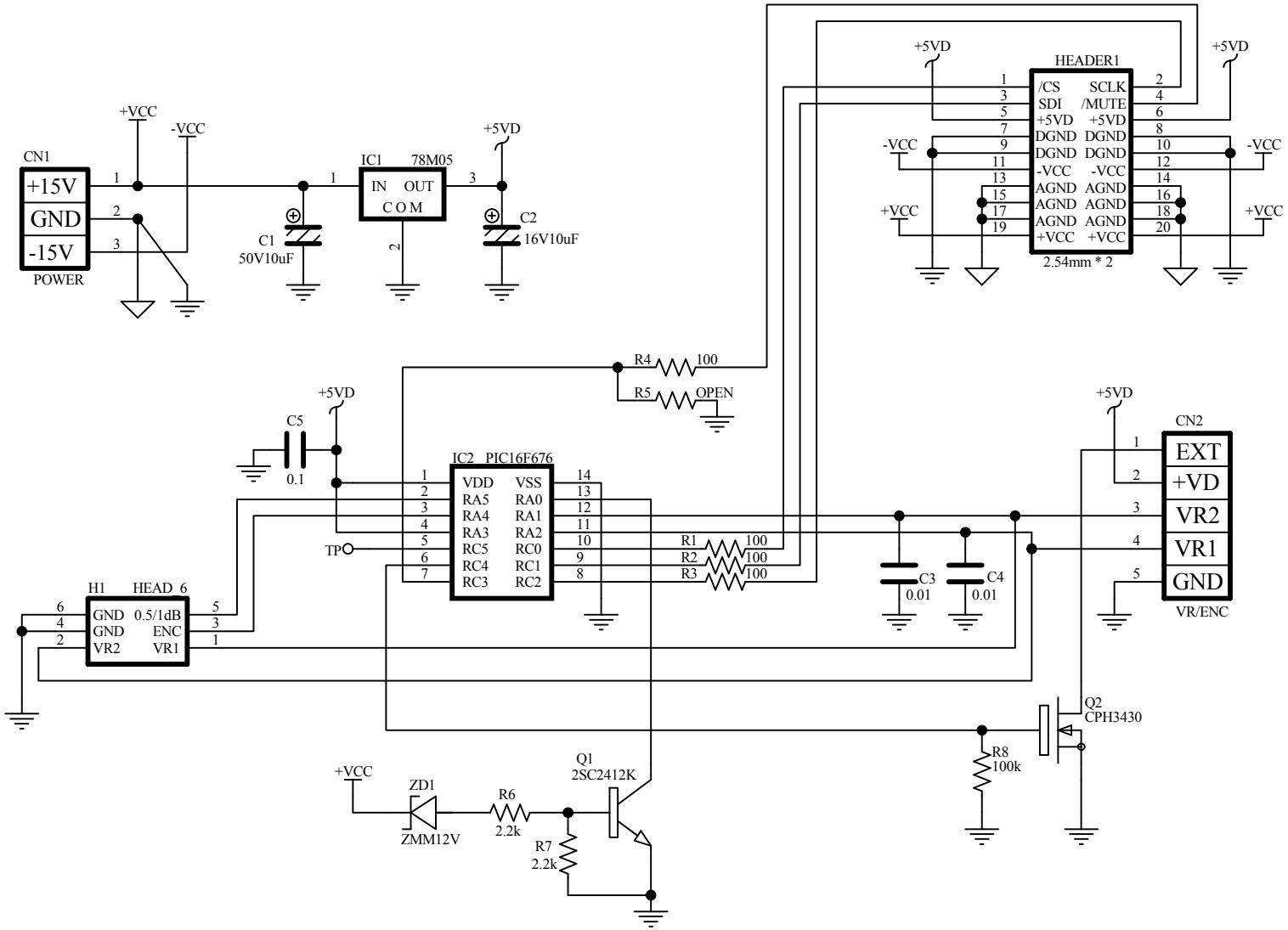
CN1
+15V
GND
-15V
POWER
+VCC
-VCC
C1
50V10uF
IC1 78M05
IN OUT
COM
+5VD
C2
16V10uF
HEADER1
/CS SCLK
SDI /MUTE
+5VD +5VD
DGND DGND
DGND DGND
-VCC -VCC
AGND AGND
AGND AGND
AGND AGND
+VCC +VCC
2.54mm * 2
R4 100
R5 OPEN
C5
0.1
IC2 PIC16F676
VDD VSS
RA5 RA0
RA4 RA1
RA3 RA2
RC5 RC0
RC4 RC1
RC3 RC2
TP
R1 100
R2 100
R3 100
C3
0.01
C4
0.01
CN2
EXT
+VD
VR2
VR1
GND
VR/ENC
H1 HEAD_6
GND 0.5/1dB
GND ENC
VR2 VR1
Q2
CPH3430
R8
100k
Q1
2SC2412K
ZD1
ZMM12V
R6
2.2k
R7
2.2k