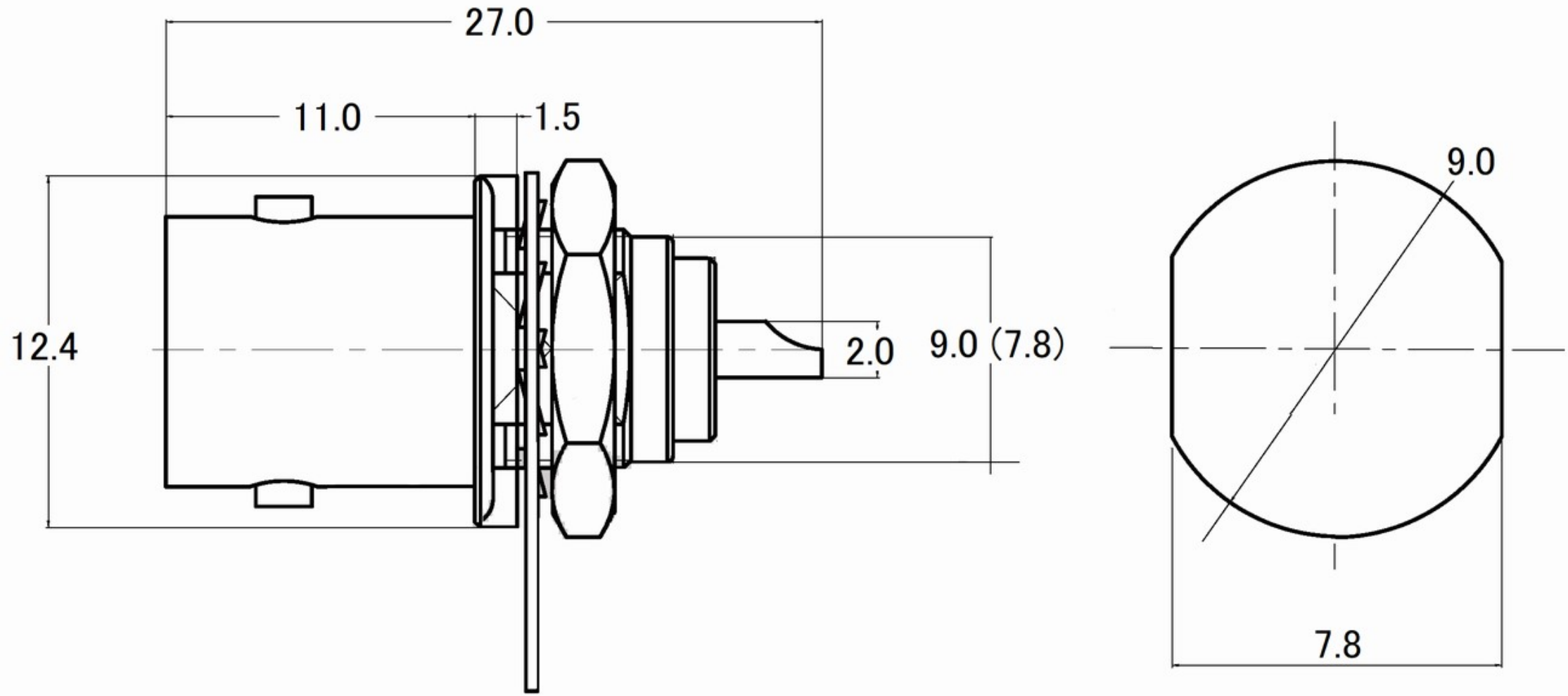
27.0
11.0
1.5
12.4
2.0
9.0 (7.8)
9.0
7.8